Pressure Pulsation calculation

Index

1. Purpose & Scope 3

2. Definitions 3

3. General Procedure - Description 4

4. Description of the methodology 4

4.1. Gulich methodology [1] 4

5. Description of the module 7

6. Acceptance criteria 9

7. Limitations 9

8. References 10

1. Purpose & Scope

This procedure establishes the criteria to calculate the pressure pulsation inside centrifugal pumps by using Gulich [1] approach.

This procedure applies to the pressure pulsation evaluation of centrifugal pumps used in the oil & gas, petrochemical, and power generation industries.

This procedure applies to volute and diffuser pumps, as well as single or multistage pumps.

The procedure is applicable to the plant of Nova Milanese and the plant of La Spezia.

2. Definitions

Abbreviation	Definition	Unit of Measurement
n	Rotational speed of the pump's rotor	[rpm]
Qrtd	Flowrate at rated condition	[m^3/h or GPM]
Hrtd.st	Pump stage head at rated condition	[m or ft]
Qbep	Flowrate at best efficiency point	[m^3/h or GPM]
D2	External diameter of the impeller	[mm or inch]
D3	Cutwater diameter	[mm or inch]
Dvaneless	Vaneless base circle diameter	[mm or inch]
U2	Peripheral velocity at the impeller D2	[m/s or ft/s]
Dp*	Dimensionless fluctuation	[/]
DPd	Pressure amplitude	[bar or psi]
DPp-p	Peak pressure amplitude	[bar or psi]
PDrmp	Rms pressure signal	[bar or psi]
Cmax	Max absolute velocity downstream the impeller's outlet	[m/s or ft/s]
Cave	Average velocity downstream the impeller's outlet	[m/s or ft/s]
DsigmaLe	Alternating stress on Leading edge of diffuser or tongues	[MPa or ksi]

3. General Procedure - Description

The evaluation of pressure pulsation is calculated using the **Mod. 541** "*Pressure pulsation calculation*" [3].

This method considers the following pump features:

- Diffuser of volute pumps
- n
- Qrtd
- Hrtd.st
- Hbeb.st
- Qbep
- D2
- Dcw
- Dvaneless
- Dp*
- DPd
- DPp-p
- PDrmp
- Cmax
- Cave
- DsigmaLe

4. Description of the methodology

The calculation of the pressure pulsation defines the value of the pressure amplitude based on the extrapolation of statistical data proposed by Gulich [1].

The method is based on the formulation described below.

4.1. Gulich methodology [1]

The methodology is based on the trend proposed by [1] on Figure.10.6. It evaluates pressure pulsations of all centrifugal pumps. The chart is shown on *Figure 3*.

Several curves are shown in the chart:

- Curves 1 to 4 represent the ratio between the velocity at the outlet of the impeller to the peripheral velocity. It considers either the domain between the impeller and the vaneless casing (curves 1-2) or the domain between the vaneless diameter and the cutwater (curves 3-4). Curves 1 and 3 refer to the maximum absolute velocity distribution of the wake propagating from the impeller's outlet while Curves 2 and 4 refer to the average velocity (as shown in *Figure 1*).

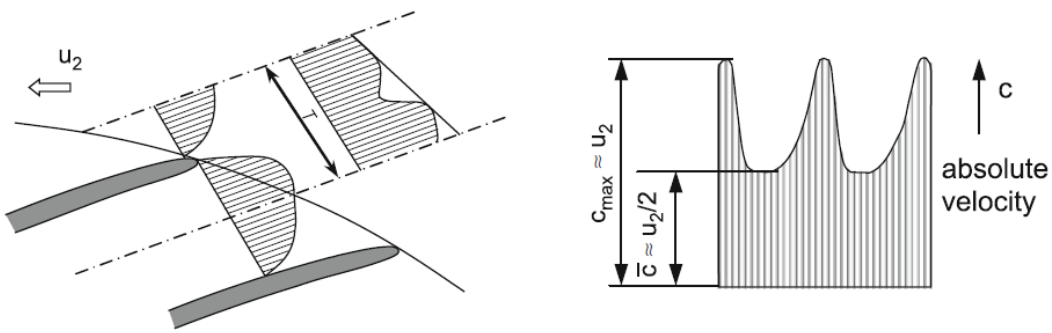

Figure 1: velocity distribution in the wake downstream the impeller's outlet

- Curves 5 to 8 calculate DP* = DPd/(0.5*ro*u2^2) for several configurations:
  - Curves 5 and 6 refer to diffuser pumps, respectively at 60% and 100% Qbep.
  - Curves 7 and 8 refer to volute pumps, respectively at 50% and 100% Qbep.
- Curve 9 calculates the unsteady stress on leading edge of diffuser vanes.

Pressure amplitude DPd refers to the Dpa shown in *Figure 2*.

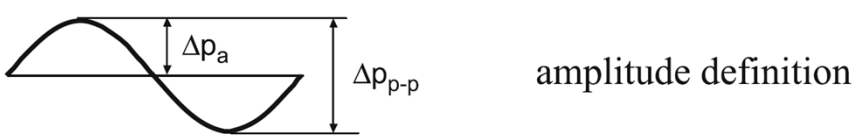

Figure 2: pressure amplitude definition.

Sometimes is helpful to use the peak-to-peak value of the pressure signal.

To evaluate the peak-to-peak signal, DPp-p is sufficient to double the DPd value.

Another important value to measure is the DPrms. It can be evaluated using the formula below:

$$\Delta p_{RMS} = \frac{\Delta p_d}{\sqrt{2}} = \frac{\Delta p_{p-p}}{2\sqrt{2}}$$

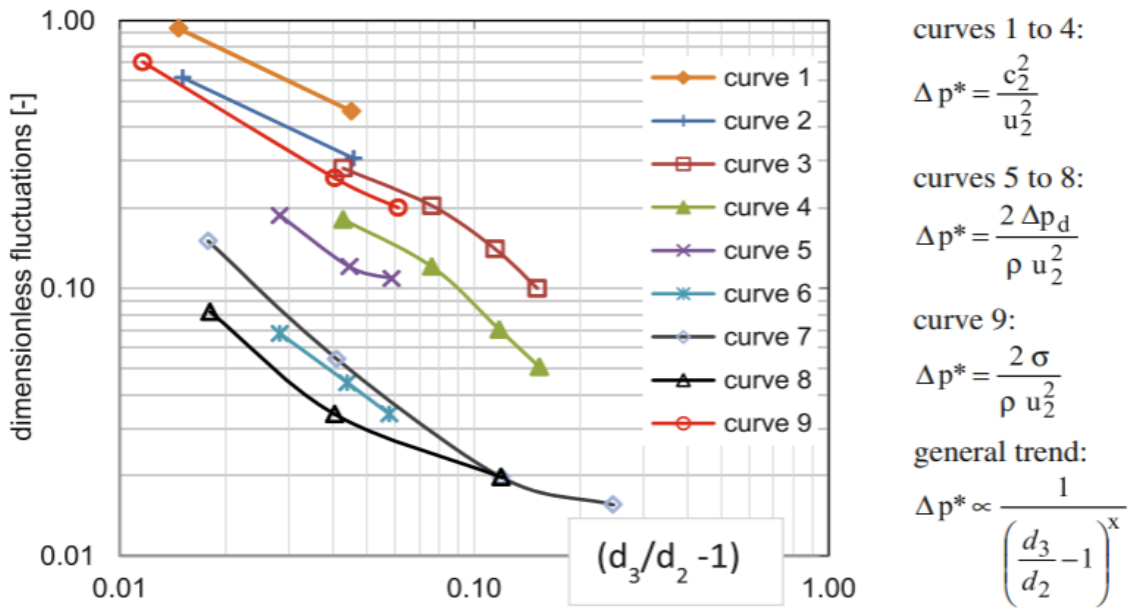

	Measured quantity	Location		|x|	Lit.
1	Unsteady stagnation pressure	downstream of trailing edge	local	0.63	[4]
2			average	0.63	
3		vaneless diffuser	low flow	0.8	[88]
4			high flow	0.92	
5	Pressure pulsations	diffuser inlet	$q^* = 0.6$	0.77	[67]
6			$q^* = 1.0$	0.95	
7		volute	$q^* = 0.5$	0.88	[79]
8			$q^* = 1.0$	0.74	
9	Unsteady stress in diffuser vane	diffuser leading edge	1/10 of measured stresses are plotted	0.77	[33]

Figure 3: influence of the gap between the casing and the external impeller diameter from [1].

All the curves in *Figure 3* have been transformed in grade 3 splines.

For the sake of accuracy, logarithmic functions are used to extract curves. The polynomial curve used to overlap the data is the following:

LOG10(Y) = C0+C1*LOG10(X)+C2LOG10(X^2)+C3*LOG10(X^3)

The coefficients used for the polynomial expression are shown in *Table 1*.

Table 1: coefficients for polynomial expression

curve	1	2	3	4	5	6	7	8	9
C0	-0.2921	0.0113	-0.3907	-0.5797	-0.6189	-0.2055	-0.76	-0.4739	0.1256
C1	-23.975	-19.002	-3.8581	-3.0731	-23.399	-24.082	-24.496	-25.577	-29.068
C2	275.36	209.92	-1.75	-24.72	183.63	234.59	225.15	191.63	339.26
C3	-1244.9	-909.59	2.0143	93.181	-515.28	-745.44	-710.67	-522.11	-1496

5. Description of the module

The mask for the input data is shown in *Figure 4*.

Only data in the yellow cells must be compiled.

PUMP MODEL	
PUMP SIZE	
DRAWING NUMBER	

INPUT DATA		
unit system	SI	
Pump speed	1480	RPM
D2	350.0	mm
D3	365.0	mm
volute or diffuser	diffuser	
D vaneless zone	355.0	mm

	Q	H stage
	m3/h	m
BEP	1200.0	65.0
RTD	900	75

Figure 4: Input data for pressure pulsation calculation.

Data can be compiled both on SI or US system units.

Figure 5 shows the output data of the module.

Output data contain a table with several trends of absolute velocity, pressure pulsation and alternating stresses on leading edge as a function of the dimensionless gap (D-D2)/D2. The target value of pressure pulsation for the gap (D3-D2)/D2 is calculated for both the Best Efficiency Point (BEP) and the rated condition. Extra data for alternating strength on the leading edge is calculated as well.

Depending on the system unit selected, the value of the velocity is m/s or ft/s, for the pressure pulsation is bar or psi and for the alternating stress is MPa or ksi.

Charts of velocity distribution outside the impeller's outlet to D3 and pressure distribution trends for BEP and rated conditions are shown. A chart of the alternating sigma trend is also plotted. Cross points refer to the (D3-D2)/D2 ratio defined as input.

OUTPUT DATA

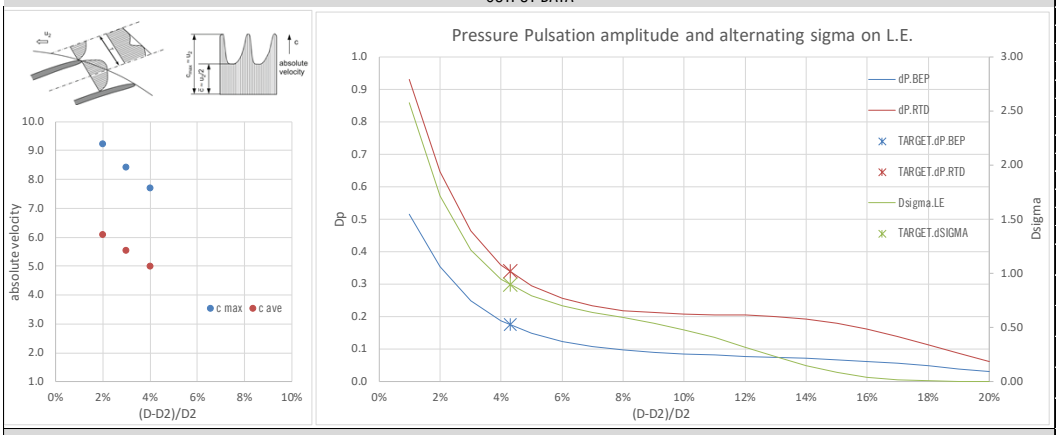

OUTPUT DATA

(D-D2)/D2	C2.local	C2.ave	dP.BEP	dP.RTD	alternating stress on LE
%	m/s	m/s	bar	bar	MPa
1%			0.51	0.93	2.57
2%	9.22	6.07	0.35	0.64	1.71
3%	8.42	5.52	0.25	0.46	1.21
4%	7.68	4.98	0.19	0.36	0.95
5%	0.00	0.00	0.15	0.30	0.79
6%	0.00	0.00	0.12	0.26	0.70
7%	0.00	0.00	0.11	0.23	0.64
8%	0.00	0.00	0.10	0.22	0.59
9%	0.00	0.00	0.09	0.21	0.54
10%	0.00	0.00	0.08	0.21	0.48
11%	0.00	0.00	0.08	0.21	0.41
12%	0.00	0.00	0.08	0.20	0.32
13%	0.00	0.00	0.08	0.20	0.23
14%	0.00	0.00	0.07	0.19	0.15
15%	0.00	0.00	0.07	0.18	0.08
16%	0.00	0.00	0.06	0.16	0.04
17%	0.00	0.00	0.06	0.14	0.02
18%	0.00	0.00	0.05	0.11	0.01
19%	0.00	0.00	0.04	0.09	0.00
20%	0.00	0.00	0.03	0.06	0.00

u2	27.1	m/s

CHECK

(D3-D2)/D2	dP.BEP	dP.RTD	Dsigma.LE
%	bar	bar	MPa
4%	0.17	0.34	0.89

Figure 5: Output data for pressure pulsation calculation.

6. Acceptance criteria

The criteria used on the pressure pulsation calculation is summarized in *Table 2* and refers to data contained in curves plotted in *Figure 3*.

Table 2: acceptance criteria.

(D-D2)/D2	Q<Qmin	Qmin<Q<Qbep	Q≥Qbep
<Dvaneless	Data calculated from Curve 1 and Curve 2	Data calculated from Curve 1 and Curve 2	Data calculated from Curve 1 and Curve 2
>Dvaneless and <D3	Data calculated from Curve 3 and Curve 4	Data calculated from Curve 3 and Curve 4	Data calculated from Curve 3 and Curve 4
D=D3 and diffuser pump	Data calculated from Curve 5 Qmin=0.6Qbep	Linear interpolation between Qmin=0.6Qbep and Qbep	Data calculated from Curve 6
D=D3 and volute pump	Data calculated from Curve 7 Qmin=0.5Qbep	Linear interpolation between Qmin=0.5Qbep and Qbep	Data calculated from Curve 8
D=D3 and alternating sigma calculation	Data calculated from Curve 9	Data calculated from Curve 9	Data calculated from Curve 9

7. Limitations

The method analyses exclusively the effect of radial gap modifications on centrifugal pumps that is the main parameter on reducing pressure pulsations on them.

The calculated pressure pulsations refer to the statistical data based on the standard configuration of impeller and volute/diffuser. To mitigate the effect of pressure pulsation, refer to the **SOP-556** "*Design criterion for lowering pressure pulsations*" [2].

Trimming the impeller to increase gap B can raise blade loading, potentially diminishing the expected benefits. Generally, impeller trimming is assumed to reduce pressure pulsations, especially in diffuser pumps. However, in rare cases such as volute pumps, increasing gap B might lead to higher pulsations due to a more non-uniform flow at the impeller's outlet caused by higher vane loading and thicker blade

trailing edges. Volute pumps are particularly susceptible to this behavior; when D3/D2 is large, the relative gain from trimming is minimal, and increased blade loading may dominate.

CFD is a valuable tool to evaluate pressure pulsations on volute and diffuser cutwater. Whenever data is available, it is preferred to perform the evaluation using CFD.

8. References

[1] J.F.Gulich "Centrifugal Pumps" Fourth Edition - 2020

[2] SOP – 556 "Design criterion for lowering pressure pulsations"

[3] Mod. 541 "Pressure pulsation calculation"